Iranian Journal of Operations Research
Vol. 14, No. 2, 2023, pp. 136-148
DOI:

Scale Elasticity in Heterogeneous Supply Chains with Undesirable Outputs

Roghayeh Azizi Usefvand[1], Sohrab Kordrostami[2*], Alireza Amirteimoori[3], Maryam Daneshmand-Mehr[4]

Supply chains often have different technologies. Additionally, organizations with multiple stages can evaluate their operational efficiency by analyzing scale elasticity, which helps determine if they are functioning optimally or if there is room for improvement. This evaluation allows for the identification of potential inefficiencies and opportunities for enhancement. Consequently, this research introduces a two-stage DEA-based approach with undesirable outputs to examine the scale elasticity of supply chains within meta and group frontiers. The measurement of group and meta performance of general systems and stages is conducted for this purpose. Moreover, the study addresses the scale elasticity of supply chains with undesirable outputs by considering the heterogeneity of technologies. To achieve this, the study focuses on the right and left scale elasticity of efficient general systems and each stage. A real-world application from the soft drink industry is provided to illustrate the proposed model. The results show the applicability of the introduced methodology for estimating the scale elasticity of supply chains under meta and group boundaries.

***Keywords**: scale elasticity, supply chains, DEA, meta-frontier, undesirable outputs.*

Manuscript was received on 01/14/2024, revised on 01/24/2024 and accepted for publication on 02/23/2024.

1. Introduction

The analysis of multi-stage processes is essential for effective planning in practical situations. Decision-makers must also comprehend the idea of scale elasticity in meta and group technologies to make well-informed decisions about scaling up or down. Technology heterogeneity is a significant factor to consider in performance analysis. It refers to the presence of different technologies or production processes used by different entities and can arise due to various causes such as differing resources, technological advancements, or unique strategies. O'Donnell et al. [13] utilized data envelopment analysis (DEA) and stochastic frontier analysis (SFA) methods to assess metafrontiers and group frontiers. Zhang et al. [25] developed a DEA approach based on the directional distance function to examine technology gaps in fossil fuel electricity generation. Wang et al. [21] utilized the metafrontier DEA approach to study energy efficiency and estimated the energy efficiency of China's provinces. Wang et al. [20] evaluated the carbon reduction efficiency

* Corresponding Author.
[1] Department of Industrial Engineering, Lahijan Branch, Islamic Azad University, Lahijan, Iran, Email: rayhaneh_azizi@yahoo.com .
[2] Department of Mathematics, Lahijan Branch, Islamic Azad University, Lahijan, Iran, Email: sohrabkordrostami@gmail.com.
[3] Faculty of Engineering & Natural Sciences, Istinye University, Istanbul, Turkey, Email: aamirteimoori@gmail.com.
[4] Department of Industrial Engineering, Lahijan Branch, Islamic Azad University, Lahijan, Iran, Email: m.daneshmand2010@gmail.com.

[Downloaded from iors.ir on 2026-11-28]

of various carbon reduction technologies using the metafrontier DEA technique. Yu and Chen [23] assessed the performance and technological bias of tourist hotels, treated as black boxes, using the metafrontier DEA framework. Chiu et al. [7] designed a network DEA approach with quasi-fixed inputs to decompose metafrontier inefficiency. Huang et al. [10] evaluated the efficiency of Taiwanese hotels using an integrated approach, namely the nonhomogeneous two-stage DEA model. Sun et al. [19] measured the performance of heterogeneous bank supply chains through the directional distance function and metafrontier models. Chao et al. [6] introduced the convex metafrontier DEA model to calculate profitability and marketability efficiencies, as well as estimate technology gaps in heterogeneous Taiwanese banks. Yu and Chen [22] proposed a metafrontier network DEA method to explore technology biases in each stage and determine the preferred directions of technological progress for entities. Kordrostami and Jahani Sayyad Noveiri [11] addressed the cost performance in heterogeneous network processes.

Scale elasticity, on the other hand, measures an entity's ability to adjust its scale of operation without significantly impacting its efficiency. It quantifies how an entity's performance is affected when its inputs and outputs are increased or decreased proportionally. In the literature on DEA, researchers have explored the concept of scale elasticity within homogeneous technology. Previous studies [9, 14, 17] have looked at scale elasticity in black-box processes that involve external inputs and outputs. Sarac et al. [18] proposed a method for calculating response indicators at different levels of a specified DEA technology using stratification. Zelenyuk [24] examined scale elasticities based on directional distance function for black-box technologies with multiple inputs and outputs. Ren et al. [15] proposed a DEA methodology to address directional returns to scale and directional scale elasticity issues while considering decision-makers' management preferences. Amirmohammadi et al. [1] estimated scale elasticities when integer-valued factors were present. Additionally, the study addressed by Amirmohammadi et al. [2] handled scale elasticities with undesirable outputs and non-discretionary measures. Sahoo [18] examined scale elasticity in two-stage processes using network DEA models. Additionally, Azizi et al. [5] investigated the directional scale elasticities of two-stage networks with weakly disposable outputs and deterministic measures. Amirteimoori et al. [3] focused on calculating the scale elasticity of two-stage parallel-series processes. Amirteimoori et al. [4] evaluated a scale elasticity using a value-based cost efficiency approach. However, there is a lack of literature on scale elasticity in two-stage processes under group and meta technologies. Consequently, further investigation is necessary to bridge this gap and enhance understanding of how group and meta technologies affect scale elasticities in two-stage processes with undesirable outputs.

To address this research gap and contribute to the study of scale elasticities, this study proposes alternative DEA-based approaches for estimating scale elasticities in supply chains under meta and group frontiers with external inputs and outputs at each stage and undesirable outputs. Specifically, the performance of general two-stage processes and each individual stage is evaluated, and efficient general systems are analyzed for their elasticity on both the right and left scales, as well as at each stage using the proposed approaches. A case study from the soft drink sector is also included to illustrate the application of these methods.

Overall, the novelty and contribution of the paper lie in its integration of technology heterogeneity into the analysis of scale elasticity in supply chains with undesirable outputs. It presents a more comprehensive and accurate method for evaluating the implications of changing the scale of supply chain operations, which can aid in better decision-making in supply chain management. Furthermore, the scale elasticity in the soft drink chains, specifically considering the impact of technology heterogeneity has been explored.

The structure of this study is organized as follows: Preliminaries and basic definitions are presented in Section 2. The proposed models to estimate the scale elasticity of supply chain systems with undesirable outputs under meta and group technologies appear in Section 3. A real-world

[Downloaded from iors.ir on 2026-11-28]

application of the soft drink sector is given in Section 5 for clarification. Finally, conclusions and remarks are provided in Section 6.

2. Preliminaries

In this section, main definitions and expressions, containing scale elasticity and technology heterogeneity are provided.

2.1. Scale elasticity

The attribute of scale elasticity plays a crucial role in the context of production frontiers. It measures how the output responds to changes in input, specifically at the boundary of a particular technological construct. This measurement is considered a metric. Elasticity in a technological setting with a single input and output scale can be described by the ratio of marginal productivity to average productivity at an optimal level.

The concept of scale elasticity provides a precise numerical evaluation of the level of returns-to-scale exhibited by the units located on the boundary. More specifically, a scale elasticity value of one indicates constant returns to scale, while a value greater than one suggests increasing returns to scale. Conversely, a value less than one reflects decreasing returns to scale.

An alternative definition for the proportional output response function is proposed in the following way, which relies solely on the concept of technology T and removes any reference to the transformation function.

$$\beta(\alpha) = Max\{\beta \mid (\alpha X_o, \beta Y_o) \in T, \beta \in R\}.$$

The notion of a technology T is defined as encompassing the complete set of feasible combinations of inputs and outputs (X, Y) that can be utilized by a given production entity.

2.2. Technology heterogeneity

Technology heterogeneity in DEA refers to the variation in technology choices employed by different DMUs within a given industry or sector. It recognizes that not all firms or organizations use the same production processes or input-output combinations to achieve their respective outputs.

Actually, in reality, firms may have different technologies due to various reasons such as different management practices, production techniques, or technology adoption levels.

In the presence of technology heterogeneity, the traditional DEA model may lead to biased efficiency scores and incorrect rankings because it assumes all DMUs are efficient or inefficient based on the same technology frontier. Therefore, researchers and practitioners often extend the traditional DEA models to account for technology heterogeneity.

One popular approach to handle technology heterogeneity in DEA is to use a meta-frontier framework. In this approach, a separate technology frontier is estimated for each group of DMUs with similar technologies. Each technology frontier represents the best practice technology for that specific group of DMUs, and efficiency scores are calculated based on these individual frontiers instead of a single aggregate frontier. This method allows for a more accurate assessment by considering the distinct technologies employed by different DMUs. Under meta technology, the efficiency of DMUs in these groups as a whole frontier can be analyzed and compared.

Overall, technology heterogeneity in DEA acknowledges the diversity in technological choices among firms or organizations and provides a more realistic and accurate assessment of efficiency and performance. It allows for a better understanding of the industry dynamics, technological progress, and the factors influencing the efficiency of various DMUs.

[Downloaded from iors.ir on 2026-11-28]

3. Scale Elasticity in Heterogeneous Supply Chains with Undesirable Outputs

This section focuses on the analysis of group input-oriented efficiency and meta input-oriented efficiency in the system shown in Figure 1. Figure 1 displays the vector of inputs, desirable outputs for stages 1, and also intermediate measures as $(\mathbf{x}^1, \mathbf{y}^1, \mathbf{z})$. Furthermore, the vector of inputs, desirable and undesirable outputs for the stage 2 are displayed by $(\mathbf{x}^2, \mathbf{y}^2, \mathbf{b})$. It is possible for two-stage systems to operate at different technological levels, resulting in discrepancies in technological level across specific stages. Hence, the efficiencies of the group and meta, as well as the scale elasticity accounting for technology heterogeneity, are examined and calculated.

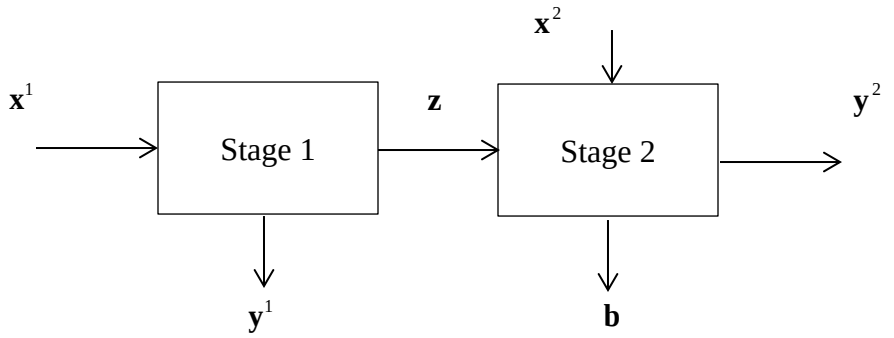

Figure 1. Supply chain structure under consideration

Suppose J supply chains as decision making units (DMUs), $DMU_j (j = 1,...,J)$ are under examination. The inputs $x_{ij}^1 (i = 1,...,m_1,\ j = 1,...,J)$ are used in stage 1 and desirable outputs $y_{rj}^1 (r = 1,...,s_1,\ j = 1,...,J)$, and intermediate measures $z_{kj} (k = 1,...,K,\ j = 1,...,J)$ are produced. In Stage 2, intermediate measures $z_{kj} (k = 1,...,K,\ j = 1,...,J)$ and external inputs $x_{ij}^2 (i = 1,...,m_2,\ j = 1,...,J)$ are utilized and desirable outputs $y_{rj}^2 (r = 1,...,s_2,\ j = 1,...,J)$ and undesirable outputs $b_{hj} (h = 1,...,H,\ j = 1,...,J)$ are generated. Due to the differences in production technologies, supply chains are categorized into $E' > 1$ groups that $\sum_{e=1}^{E'} J^e = J$. The next approach (1) determines the group's efficiency in supply chains depicted in Figure 1. $\lambda_j (j = 1,...,J^e)$ and $\mu_j (j = 1,...,J^e)$ show intensity variables corresponding to stages 1 and 2 for the eth group, respectively. Models are designed under the variable returns to scale property. θ_o^1 and θ_o^2 indicate the efficiency scores related to stages 1 and 2. ω_d considers the significance of each stage that has been specified by policy makers and managers. Moreover, the variables related to intermediate measures under examination are displayed by $\tilde{z}_{ko}$.

[Downloaded from iors.ir on 2026-11-28]

$$
\begin{aligned}
& E^{*} = Min \sum_{d=1}^{2} \omega_d \theta_o^d \Big/ \sum_{d=1}^{2} \omega_d \\
& s.t. \quad \sum_{j \in J^e} \lambda_j x_{ij}^1 \le \theta_o^1 x_{io}^1, \ i = 1,...,m_1, \\
& \quad \sum_{j \in J^e} \lambda_j y_{rj}^1 \ge y_{ro}^1, \quad r = 1,...,s_1, \\
& \quad \sum_{j \in J^e} \lambda_j z_{kj} \ge \tilde{z}_{ko}, \ k = 1,...,K, \\
& \quad \sum_{j \in J^e} \lambda_j = 1, \\
& \quad \sum_{j \in J^e} \mu_j z_{kj} \le \tilde{z}_{ko}, \ k = 1,...,K, \\
& \quad \sum_{j \in J^e} \mu_j x_{ij}^2 \le \theta_o^2 x_{io}^2, \ i = 1,...,m_2, \\
& \quad \sum_{j \in J^e} \mu_j y_{rj}^2 \ge y_{ro}^2, \ r = 1,...,s_2, \\
& \quad \sum_{j \in J^e} \mu_j b_{hj} \le b_{ho}, \ h = 1,...,H, \\
& \quad \sum_{j \in J^e} \mu_j = 1, \\
& \lambda_j \ge 0, \mu_j \ge 0, \theta_o^d \le 1, \forall i, d.
\end{aligned}
\tag{1}
$$

DMU_o is called overall efficient under model (1) if $E^{*} = 1$. It means that it is efficient in stages 1 ad 2 with the optimal values $\theta_o^{*1} = \theta_o^{*2} = 1$. Otherwise, it is overall inefficient.

Under the group frontier, the multiplier form of model (1) can be formulated as follows:

$$
\begin{aligned}
& Max \ \sum_{r=1}^{s_1} u_r^1 y_{ro}^1 + \sum_{r=1}^{s_2} u_r^2 y_{ro}^2 - \sum_{h=1}^{H} c_h b_{ho} - u_0^1 - u_0^2 \\
& s.t. \ \sum_{r=1}^{s_1} u_r^1 y_{rj}^1 + \sum_{k=1}^{K} a_k z_{kj} - \sum_{i=1}^{m_1} v_i^1 x_{ij}^1 - u_0^1 \le 0, \ j \in J^e, \\
& \quad \sum_{r=1}^{s_2} u_r^2 y_{rj}^2 - \sum_{k=1}^{K} a_k z_{kj} - \sum_{i=1}^{m_2} v_i^2 x_{ij}^2 - \sum_{h=1}^{H} c_h b_{hj} - u_0^2 \le 0, \ j \in J^e, \\
& \quad \sum_{i=1}^{m_1} v_i^1 x_{io}^1 + \sum_{i=1}^{m_2} v_i^2 x_{io}^2 + \sum_{k=1}^{K} a_k z_{ko} = 1, \\
& v_i^1, v_i^2, u_r^1, u_r^2, a_k, c_h \ge 0, \forall i, r, k, h; u_0^1, u_0^2 \ \textit{free in sign.}
\end{aligned}
\tag{2}
$$

[Downloaded from iors.ir on 2026-11-28]

The technical efficiency of supply chains and stages can be computed by applying the optimal solutions derived from model (2) according to the following approach:

$$OE = \frac{\sum_{r=1}^{s_1} u_r^{*1} y_{ro}^1 + \sum_{r=1}^{s_2} u_r^{*2} y_{ro}^2 - \sum_{h=1}^{H} c_h^* b_{ho} - u_0^{*1} - u_0^{*2}}{\sum_{i=1}^{m_1} v_i^{*1} x_{io}^1 + \sum_{i=1}^{m_2} v_i^{*2} x_{io}^2 + \sum_{k=1}^{K} a_k^* z_{ko}}, \quad (3)$$

$$ES_1 = \frac{\sum_{r=1}^{s_1} u_r^{*1} y_{ro}^1 + \sum_{k=1}^{K} b_k^* z_{ko} - u_0^{*1}}{\sum_{i=1}^{m_1} v_i^{*1} x_{io}^1}, \quad (4)$$

$$ES_2 = \frac{\sum_{r=1}^{s_2} u_r^{*2} y_{ro}^2 - \sum_{h=1}^{H} c_h^* b_{ho} - u_0^{*2}}{\sum_{i=1}^{m_2} v_i^{*2} x_{io}^2 + \sum_{k=1}^{K} b_k^* z_{ko}}. \quad (5)$$

In model (2), DMUs that are assessed within specific groups possess comparable production technologies. In order to analyze the efficiency of the meta-frontier in supply chains, the following methodologies are put forward by considering the meta technology for the collection of group technologies.

$$\begin{aligned}
&EM^* = Min \sum_{d=1}^{2} \omega_d \theta_o^d \Big/ \sum_{d=1}^{2} \omega_d \\
&s.t. \quad \sum_{e=1}^{E} \sum_{j \in J^e} \lambda_j x_{ij}^1 \le \theta_o^1 x_{io}^1, \ i = 1, ..., m_1, \\
&\quad \sum_{e=1}^{E} \sum_{j \in J^e} \lambda_j y_{rj}^1 \ge y_{ro}^1, \quad r = 1, ..., s_1, \\
&\quad \sum_{e=1}^{E} \sum_{j \in J^e} \lambda_j z_{kj} \ge \tilde{z}_{ko}, \ k = 1, ..., K, \\
&\quad \sum_{e=1}^{E} \sum_{j \in J^e} \lambda_j = 1, \\
&\quad \sum_{e=1}^{E} \sum_{j \in J^e} \mu_j z_{kj} \le \tilde{z}_{ko}, \ k = 1, ..., K, \\
&\quad \sum_{e=1}^{E} \sum_{j \in J^e} \mu_j x_{ij}^2 \le \theta_o^2 x_{io}^2, \ i = 1, ..., m_2, \\
&\quad \sum_{e=1}^{E} \sum_{j \in J^e} \mu_j y_{rj}^2 \ge y_{ro}^2, \ r = 1, ..., s_2, \\
&\quad \sum_{e=1}^{E} \sum_{j \in J^e} \mu_j b_{hj} \le b_{ho}, \ h = 1, ..., H, \\
&\quad \sum_{e=1}^{E} \sum_{j \in J^e} \mu_j = 1, \\
&\lambda_j \ge 0, \mu_j \ge 0, \theta_o^d \le 1, \forall i, d.
\end{aligned} \quad (6)$$

[Downloaded from iors.ir on 2026-11-28]

The multiplier form of the two-stage DEA approach within the meta frontier framework can be expressed in the following manner:

$$
\begin{aligned}
&Max \ \sum_{r=1}^{s_1} u_r^1 y_{ro}^1 + \sum_{r=1}^{s_2} u_r^2 y_{ro}^2 - \sum_{h=1}^{H} c_h b_{ho} - u_0^1 - u_0^2 \\
&s.t. \sum_{r=1}^{s_1} u_r^1 y_{rj}^1 + \sum_{k=1}^{K} a_k z_{kj} - \sum_{i=1}^{m_1} v_i^1 x_{ij}^1 - u_0^1 \le 0, j \in J^e, e \in E, \\
&\quad \sum_{r=1}^{s_2} u_r^2 y_{rj}^2 - \sum_{k=1}^{K} a_k z_{kj} - \sum_{i=1}^{m_2} v_i^2 x_{ij}^2 - \sum_{h=1}^{H} c_h b_{hj} - u_0^2 \le 0, j \in J^e, e \in E, \\
&\quad \sum_{i=1}^{m_1} v_i^1 x_{io}^1 + \sum_{i=1}^{m_2} v_i^2 x_{io}^2 + \sum_{k=1}^{K} a_k z_{ko} = 1, \\
&v_i^1, v_i^2, u_r^1, u_r^2, a_k, c_h \ge 0, \forall i, r, k, h, l; u_0^1, u_0^2 \ \textit{free in sign.}
\end{aligned}
\tag{7}
$$

The technical efficiency of supply chains and each stage under meta technology can be calculated by obtaining the optimal solutions from model (7) and using the expressions (3)-(5).
To address the scale elasticity of supply chains under group and meta technologies, models (1) and (6) are computed. The process under examination is called overall efficient under group (meta) technology if $E^* = 1$ $(EM^* = 1)$ and all slack variables equal to zero. In the case of an inefficient process, the projection points need to be taken into account.
In order to estimate the input-oriented right-hand scale elasticity for the supply chain o under the group technology, the subsequent model is presented:

$$
\begin{aligned}
&Max \ u_0^1 + u_0^2 \\
&s.t. \sum_{r=1}^{s_1} u_r^1 (y_{ro}^1 + s_r^{1+}) + \sum_{k=1}^{K} b_k \tilde{z}_{ko}^* - \sum_{i=1}^{m_1} v_i^1 (\theta_o^{*1} x_{io}^1 - s_i^{1-}) - u_0^1 = 0, \\
&\quad \sum_{r=1}^{s_2} u_r^2 (y_{ro}^2 + s_r^{2+}) - \sum_{k=1}^{K} b_k \tilde{z}_{ko}^* - \sum_{i=1}^{m_2} v_i^2 (\theta_o^{*2} x_{io}^2 - s_i^{2-}) - \sum_{h=1}^{H} c_h (b_{ho} - s_h^b) - u_0^2 = 0, \\
&\quad \sum_{r=1}^{s_1} u_r^1 y_{rj}^1 + \sum_{k=1}^{K} b_k z_{kj} - \sum_{i=1}^{m_1} v_i^1 x_{ij}^1 - u_0^1 \le 0, (j \in J^e, j \ne 0), \\
&\quad \sum_{r=1}^{s_2} u_r^2 y_{rj}^2 - \sum_{k=1}^{K} b_k z_{kj} - \sum_{i=1}^{m_2} v_i^2 x_{ij}^2 - \sum_{h=1}^{H} c_h b_{hj} - u_0^2 \le 0, (j \in J^e, j \ne 0), \\
&\quad \sum_{i=1}^{m_1} v_i^1 (\theta_o^{*1} x_{io}^1 - s_i^{1-}) + \sum_{i=1}^{m_2} v_i^2 (\theta_o^{*2} x_{io}^2 - s_i^{2-}) + \sum_{k=1}^{K} b_k \tilde{z}_{ko}^* = 1, \\
&v_i^1, v_i^2, u_r^1, u_r^2, a_k, c_h \ge 0, \forall i, r, k, h; u_0^1, u_0^2 \ \textit{free in sign.}
\end{aligned}
\tag{8}
$$

In which s_i^{1-} and s_i^{2-} are slacks related to inputs of stages 1 and 2. s_r^{1+} and s_r^{2+} are slacks related to desirable outputs of stages 1 and 2 and slacks s_h^b corresponds to undesirable outputs of Stage 2.

The evaluation of the input-oriented left-hand scale elasticity for the supply chain under group technology is conducted by substituting "Max" with "Min" in model (8).

[Downloaded from iors.ir on 2026-11-28]

Additionally, the subsequent model is presented to gauge the input-oriented right-hand (+) scale elasticity for the supply chain under the meta technology:

$$
\begin{aligned}
&Max\ \ u_0^1+u_0^2\\
&s.t.\ \sum_{r=1}^{s_1}u_r^1(y_{ro}^1+s_r^{1+})+\sum_{k=1}^{K}b_k\tilde{z}_{ko}^*-\sum_{i=1}^{m_1}v_i^1(\theta_o^{*1}x_{io}^1-s_i^{1-})-u_0^1=0,\\
&\quad\sum_{r=1}^{s_2}u_r^2(y_{ro}^2+s_r^{2+})-\sum_{k=1}^{K}b_k\tilde{z}_{ko}^*-\sum_{i=1}^{m_2}v_i^2(\theta_o^{*2}x_{io}^2-s_i^{2-})-\sum_{h=1}^{H}c_h(b_{ho}-s_h^b)-u_0^2=0,\\
&\quad\sum_{r=1}^{s_1}u_r^1y_{rj}^1+\sum_{k=1}^{K}b_kz_{kj}-\sum_{i=1}^{m_1}v_i^1x_{ij}^1-u_0^1\le 0,(j\in J^e,\ j\ne 0,e\in E),\\
&\quad\sum_{r=1}^{s_2}u_r^2y_{rj}^2-\sum_{k=1}^{K}b_kz_{kj}-\sum_{i=1}^{m_2}v_i^2x_{ij}^2-\sum_{h=1}^{H}c_hb_{hj}-u_0^2\le 0,(j\in J^e,\ j\ne 0,e\in E),\\
&\quad\sum_{i=1}^{m_1}v_i^1(\theta_o^{*1}x_{io}^1-s_i^{1-})+\sum_{i=1}^{m_2}v_i^2(\theta_o^{*2}x_{io}^2-s_i^{2-})+\sum_{k=1}^{K}b_k\tilde{z}_{ko}^*=1,\\
&v_i^1,v_i^2,u_r^1,u_r^2,a_k,c_h\ge 0,\forall i,r,k,h;u_0^1,u_0^2\ \ free\ in\ sign.
\end{aligned}
\tag{9}
$$

Likewise, the evaluation of the left-hand (-) scale elasticity for the input-oriented two-stage process with meta technology entails substituting "Max" with "Min" in equation (9).
The scale elasticities for the overall supply chain and its individual stages 1 and 2 with group technology can be specified as follows:

$$\varepsilon o=\frac{E^*}{E^*+u_o^{*1}+u_o^{*2}} \tag{10}$$

$$\varepsilon 1=\frac{\theta_o^{*1}}{\theta_o^{*1}+u_o^{*1}} \tag{11}$$

$$\varepsilon 2=\frac{\theta_o^{*2}+u_o^{*1}}{\theta_o^{*2}+u_o^{*1}+u_o^2} \tag{12}$$

Similarly, the scale elasticity values can be calculated under the meta-frontier. It is important to note that by using models (8) and (9) with the "Max" or "Min" approach, the left- and right-hand scale elasticity of both the overall two-stage process and its individual stages can be estimated under group and meta technologies. Moreover, by analyzing the outcomes obtained from solving models (8) and (9), the returns to scale status can also be determined. A noteworthy point is that the following expressions apply:

Remark 3.1. We have the subsequent expressions:
1. Examining alternative optimal solution in $u_0^1+u_0^2$, the technology shows IRS $((\varepsilon o)^-<1)$ if $(u_0^1+u_0^2)^-<0$, CRS $((\varepsilon o)^-\le 1\le(\varepsilon o)^+)$ if $(u_0^1+u_0^2)^-\ge 0\ge(u_0^1+u_0^2)^+$ and DRS $((\varepsilon o)^+<1)$ if $(u_0^1+u_0^2)^+>0$.

[Downloaded from iors.ir on 2026-11-28]

2. Examining alternative optimal solution in u_0^1, the technology shows IRS $((\varepsilon 1)^- > 1)$ if $u_0^{1-} < 0$, CRS $((\varepsilon 1)^- \le 1 \le (\varepsilon 1)^+)$ if $u_0^{1-} \ge 0 \ge u_0^{1+}$ and DRS $((\varepsilon 1)^+ < 1)$ if $u_0^{1+} > 0$.

3. Examining alternative optimal solution in u_0^2, the technology shows IRS $((\varepsilon 2)^- > 1)$ if $u_0^{2-} < 0$, CRS $((\varepsilon 2)^- \le 1 \le (\varepsilon 2)^+)$ if $u_0^{2-} \ge 0 \ge u_0^{2+}$ and DRS $((\varepsilon 2)^+ < 1)$ if $u_0^{2+} > 0$.

4. Application

This section presents an illustration involving companies in the soft drinks industry in order to explain the suggested methodologies and demonstrate their practicality. The information presented has been sourced, in part, from reference [12]. Each process is regarded as an interconnected system comprising of two main aspects - the supplier and the producer.

Inputs of stage 1 are material cost, transportation cost, staff cost and quality cost. Desirable outputs of stage 1 are facility technology level, supplier flexibility, capability of suppliers and services. Inputs of stage 2 include transportation cost and eco-design cost. Desirable outputs of this stage contain producer reputation and number of green products. Furthermore, CO_2 emission is treated as an undesirable output and number of parts from supplier to producer is deemed as an intermediate measure.

Due to the approach described in [8], companies can be categorized into two groups. The first group consists of Behnoush, Kafir, Zam Zam, Damdaran, Sara, Pegah, and Varna, while the second group includes Abali, Khazar and Ramak. In order to evaluate the efficiency of these groups, model (1) is calculated and the results can be seen in Table 1. In stage 1, one company– Abali- is found to be inefficient, while all companies are considered efficient in stage 2. Furthermore, this company, Abali, is generally deemed as group inefficient. To measure the meta efficiency of companies, model (6) is estimated. The results are presented in columns 5-7 of Table 1. The meta efficiency scores are either less than or equal to the group efficiency values. In the context of the meta technology, the Abali company is the only one specified as inefficient in stage 1, while this number increases to two companies in stage 2. Specifically, the Khazar and Ramak companies are inefficient under meta cost technology in stage 2. Additionally, overall inefficiency is observed in three companies, namely Abali, Khazar, and Ramak, under the meta technology. For more illustration, under the meta technology, Ramak has gained the least overall efficiency score, i.e. 0.9068, in comparison with others.

Models (8) and (9) as well as expressions (10)-(12) are utilized in order to assess scale elasticity. Additionally, the RTS status is determined by employing Remark 3.1. The results for DMUs 7 and 9 (Sara and Pegah companies), which represent processes that are generally efficient, are presented in Table 2. It is evident that the analysis of RTS has indicated that both DMUs 7 and 9 exhibit DRS in stage 1 and in general within the group technology paradigm. This means that as the scale of production increases, the output increases at a decreasing rate. However, they show CRS in Stage 2. In other words, the production process operates efficiently and without any diminishing or increasing returns as the scale of production is increased. This can be represented by a linear relationship between inputs and outputs in a production function.

Furthermore, the RTS of DMUs 7 and 9 is identified as CRS under the meta technology context in each stage and generally. This means that as the scale of production increases, the output increases at the same rate. Likewise, the findings for other processes can be examined. The investigation shows that the RTS status and values of scale elasticity may change under meta and group technologies.

[Downloaded from iors.ir on 2026-11-28]

Overall, the managerial implementation involves assessing the group efficiency, meta efficiency, and scale elasticity of companies in the soft drinks industry. This analysis allows for the identification of inefficiencies and helps in decision-making regarding improvements and optimization of processes.

Table 1. Efficiency scores

DMU	Company	Group efficiency			Meta efficiency		
		Overall	Stage 1	Stage 2	Overall	Stage 1	Stage 2
1	Behnoush	1	1	1	1	1	1
2	Abali	0.9885	0.9769	1	0.9885	0.9769	1
3	Kafir	1	1	1	1	1	1
4	Zam Zam	1	1	1	1	1	1
5	Khazar	1	1	1	0.9241	1	0.8483
6	Damdaran	1	1	1	1	1	1
7	Sara	1	1	1	1	1	1
8	Ramak	1	1	1	0.9068	1	0.8136
9	Pegah	1	1	1	1	1	1
10	Varna	1	1	1	1	1	1

Table 2. Scale elasticity and RTS

DMU	Group efficiency		
	Overall	Stage 1	Stage 2
	Min /Max	Min/ Max	Min/ Max
7	-0.813/ 0.495 DRS	1/0.495 DRS	-0.813/1 CRS

[Downloaded from iors.ir on 2026-11-28]

9	-1.295/ 0.008 DRS	1/0.08 DRS	-1.295/1 CRS
DMU	Meta efficiency		
	Overall	Stage 1	Stage 2
	Min /Max	Min/ Max	Min/ Max
7	-0.844/ 1 CRS	1/1 CRS	-0.844/1 CRS
9	-1.295 / 1 CRS	1/1 CRS	-1.295 / 1 CRS

5. Conclusions

Analyzing the scale elasticity in heterogeneous supply chains with undesirable outputs is essential for improving performance and making constructive decisions. Accordingly, in the present research, we have thoroughly examined the scale elasticity of supply chains by incorporating external inputs and outputs, as well as undesirable outputs, using nonhomogeneous technologies. To evaluate the scale elasticity, we have employed two-stage DEA models which consider both group and meta technologies. To enhance the clarity of our analysis, we have presented a case study focusing on the scale elasticity of soft drink companies. The findings show the proposed approach is beneficial to analyze scale elasticity of supply chains with undesirable outputs. Throughout this study, we have ensured the consideration of all precise measures.

Furthermore, the proposed approach holds the potential for expansion to address situations where imprecise measures are present. This would contribute to a more comprehensive understanding of the scale elasticity in supply chains and its implications. Additionally, the investigation of scale elasticity in the context of various network structures offers an interesting avenue for future research. By exploring this area, researchers can enrich their understanding of the dynamics of scale elasticity and its impact on different types of supply chain networks.

References

[1]	Amirmohammadi, H., A. A. Amirteimoori, S. Kordrostami, and M. Vaez-Ghasemi, (2021), Scale elasticity in the presence of integer data: An application to electricity distribution companies, *Studies of Applied Economics*, 39 (2), 1-9.
[2]	Amirmohammadi, H., A. Amirteimoori, S. Kordrostami, and M. V. Ghasemi, (2021), Scale elasticity in the presence of undesirable and nondiscretionary factors: an application to bank branches, *Italian Journal of Pure and Applied Mathematics*, 46, 101-114.
[3]	Amirteimoori, A., Allahviranloo, T., & Arabmaldar, A. (2024), Scale elasticity and technical efficiency measures in two-stage network production processes: an application to the insurance sector. *Financial Innovation*, 10(1), 43.
[4]	Amirteimoori, A., Sahoo, B. K., & Mehdizadeh, S. (2023), Data envelopment analysis for

[Downloaded from iors.ir on 2026-11-28]

	scale elasticity measurement in the stochastic case: with an application to Indian banking, *Financial Innovation*, 9(1), 1-36.
[5]	Azizi Usefvand, R., S. Kordrostami, A. Amirteimoori, M. Daneshmand-Mehr, (2022), Estimating the directional scale elasticity of two-stage processes in the presence of undesirable outputs, *Modern Research in Decision Making*, 7(3), 57-88.
[6]	Chao, C.-M., et al., (2018), Profitability efficiency, marketability efficiency and technology gaps in Taiwan's banking industry: meta-frontier network data envelopment analysis. *Applied Economics*, 50(3), 233-250.
[7]	Chiu, C.R., et al., (2013), Decomposition of meta-frontier inefficiency in the two-stage network directional distance function with quasi-fixed inputs. *International Transactions in Operational Research*, 20(4), 595-611.
[8]	Ding, T., et al., (2018), Centralized fixed cost and resource allocation considering technology heterogeneity: a DEA approach. *Annals of Operations Research*, 268(1), 497-511.
[9]	Førsund, F.R., L. Hjalmarsson, (2004), Calculating scale elasticity in DEA models, *Journal of the Operational Research Society*, 55(10), 1023-1038.
[10]	Huang, C.-w., et al., (2016), Using the nonhomogeneous frontier two-stage DEA model to assess the efficiencies of expense utilization and operation of the Taiwanese hotel industry. *International Transactions in Operational Research*, 23(6), 1067-1087.
[11]	Kordrostami, S., M. Jahani Sayyad Noveiri, (2022), Cost efficiency analysis of heterogeneous network processes. *Economic Computation & Economic Cybernetics Studies & Research*, 56(3), 69-86.
[12]	Mirhedayatian, S.M., M. Azadi, and R. Farzipoor Saen, (2014), A novel network data envelopment analysis model for evaluating green supply chain management. International Journal of Production Economics, 147, 544-554.
[13]	O'Donnell, C.J., D.P. Rao, and G.E. Battese, (2008), Metafrontier frameworks for the study of firm-level efficiencies and technology ratios. *Empirical economics*, 34(2), 231-255.
[14]	Podinovski, V.V., F.R. Førsund, (2020), Scale Elasticity and Returns to Scale, in: S.C. Ray, R. Chambers, S. Kumbhakar (Eds.), *Handbook of Production Economics, Springer Singapore, Singapore*, 1-39.
[15]	Ren, T., Z. Zhou, R. Li, and W. Liu, (2021), Directional scale elasticity considering the management preference of decision-makers, *RAIRO-Oper. Res.*, 55(5), 2861-2881.
[16]	Sahoo, B.K., J. Zhu, K. Tone, B.M. Klemen, (2014), Decomposing technical efficiency and scale elasticity in two-stage network DEA, *European Journal of Operational Research* 233(3), 584-594.
[17]	Sahoo, B.K., K. Tone, (2015), Scale Elasticity in Non-parametric DEA Approach, in: J. Zhu (Ed.), Data Envelopment Analysis: A Handbook of Models and Methods, *Springer US, Boston*, MA, 269-290.
[18]	Sarac, S.B., K.B. Atici, A. Ulucan, (2022), Elasticity measurement on multiple levels of DEA frontiers: an application to agriculture, *Journal of Productivity Analysis*, 57(3), 313-324.
[19]	Sun, J., et al., (2017), Performance evaluation of heterogeneous bank supply chain systems from the perspective of measurement and decomposition. *Computers & Industrial Engineering*, 113, 891-903.
[20]	Wang, N., et al., (2018), A meta-frontier DEA approach to efficiency comparison of carbon reduction technologies on project level. *Renewable and Sustainable Energy Reviews*, 82, 2606-2612.
[21]	Wang, Q., et al., (2013), Energy efficiency and production technology heterogeneity in

[Downloaded from iors.ir on 2026-11-28]

	China: a meta-frontier DEA approach. *Economic Modelling*, 35, 283-289.
[22]	Yu, M.-M. and L.-H. Chen, (2020), A meta-frontier network data envelopment analysis approach for the measurement of technological bias with network production structure. *Annals of Operations Research*, 287(1), 495-514.
[23]	Yu, M.-M. and L.-H. Chen, (2020), Evaluation of efficiency and technological bias of tourist hotels by a meta-frontier DEA model. *Journal of the Operational Research Society*, 2020. 71(5): p. 718-732.
[24]	Zelenyuk, V. (2013), A scale elasticity measure for directional distance function and its dual: Theory and DEA estimation, *European Journal of Operational Research*, 228 (3), 592-600.
[25]	Zhang, N., P. Zhou, and Y. Choi, (2013), Energy efficiency, CO2 emission performance and technology gaps in fossil fuel electricity generation in Korea: A meta-frontier non-radial directional distance function analysis. *Energy Policy*, 56, 653-662.

[Downloaded from iors.ir on 2026-11-28]